KCA UNIVERSITY

SCHOOL OF BUSINESS AND PUBLIC MANAGEMENT

EFFECT OF MARKETING STRATEGIES ON PERFORMANCE OF SMALL AND MEDIUM ENTERPRISES IN KITENGELA TOWNSHIP, KAJIADO COUNTY

BY

JAMES T. SAPURO

REG. No. 14/00859

A DISSERTATION SUBMITTED IN PARTIAL FULFILLMENT OF THE AWARD OF A MASTER OF BUSINESS ADMINISTRATION (CORPORATE MANAGEMENT)

JUNE 2016

DECLARATION

I declare that this dissertation is my original work and has not been previously published or submitted elsewhere for award of a degree. I also declare that this contains no material written or published by other people except where due reference is made and author duly acknowledged.

Sign: … …… Reg. No. ……..

Date……

I do hereby confirm that I have examined the master's dissertation of

James T. Sapuro

And have certified that all revisions that the dissertation panel and examiners recommended have been adequately addressed.

Sign: _____ Date: _____

Dr. Brigitte Okonga

Dissertation Supervisor

ABSTRACT

Small and Medium Enterprises like other large enterprises have increasingly used various marketing strategies in their operation. This study sought to find out the effects of marketing strategies on the business performance of SMEs in Kitengela Township, Kenya. Companies are continually faced with the need to meet the challenges that arises from the ever changing markets and continuous competition that they face nationally, regionally and globally. As a result companies have to develop clearly defined strategies and plans for survival and growth. This research adopted a descriptive research design, with target population of 62 SMEs in Kitengela. Census sampling method was used to select the SMEs, with the sampling size of the study being 186 respondents. Data was collected using questionnaire and analysed by aid of Statistical Package of Social Scientists (SPSS). The findings were summarized using statistical measures of dispersion while data is presented using tables, graphs and frequencies. The study found out that place marketing strategy, promotion marketing strategies, and product marketing strategies have a positive and significant relationship with business performance. It further found out price marketing strategy to have a positive but insignificant relationship with business performance of SMEs. The study thus recommends that SMEs need to pay attention to the 4Ps marketing mix in general and on the place marketing strategy in particular (since it had the largest coefficient) to improve business performance.

Keywords: Marketing Mix, Performance, SMEs, Growth, Kajiado County, Kitengela Township

ACKNOWLEDGEMENT

I thank the almighty God for the far He has brought me.

Special thanks go to my research supervisor at KCA, Dr. Brigitte Okonga for her constructive criticism, guidance; knowledge and understanding that equipped me with motivation to complete this dissertation.

DEDICATION

I dedicate this dissertation to my family and many friends. Special gratitude to my parents, my wife Sarah, and children Saruni and Reson.

TABLE OF CONTENTS

DECLARATION ..... **i**
ABSTRACT ..... **ii**
ACKNOWLEDGEMENT ..... **iii**
DEDICATION ..... **iv**
TABLE OF CONTENTS ..... **v**
LIST OF TABLES ..... **vii**
LIST OF FIGURES ..... **viii**
TERMS AND DEFINITIONS ..... **ix**
ABBREVIATIONS AND ACRONYMS ..... **x**
CHAPTER ONE **1**
INTRODUCTION **1**
1.1 Background of the Study 1
1.2 Statement of the Problem 5
1.3 Objectives of the Study 6
1.4 Research Questions 7
1.5 Significance of the Study 7
1.6 Scope of the Study 8
CHAPTER TWO **9**
LITERATURE REVIEW **9**
2.1 Introduction 9
2.2 Theoretical Framework 9
2.3 Empirical Review 13
2.4 Business Performance 24
2.5 Conceptual Framework 28
2.6 Operationalization of Variables 29
2.7 Research Hypothesis 30
CHAPTER THREE **31**
METHODOLOGY **31**
3.1 Introduction 31

3.2 Research Design 31
3.3 Population of the Study 31
3.4 Sampling Design 32
3.5 Data Collection 33
3.6 Reliability and Validity 34
3.7 Data Analysis and Presentation 34
CHAPTER FOUR 36
FINDINGS AND DISCUSSION 36
4.1 Introduction 36
4.2 Response Rate 36
4.3 Demographic characteristics of the respondents 36
4.4 Independent Variables 40
4.5 Dependent Variables 40
4.6 Validity and Reliability Analysis 40
4.7 Regression Analysis and Related Procedures 40
CHAPTER FIVE 49
SUMMARY OF FINDINGS, CONCLUSIONS AND RECOMMENDATIONS 49
5.1 Introduction 49
5.2 Summary of Findings 49
5.3 Conclusion 51
5.4 Recommendation 52
5.5 Areas for further Research 53
REFERENCES 54
APPENDIX I- INTRODUCTION LETTER 57
APPENDIX II- QUESTIONNAIRE 58

LIST OF TABLES

Table 2. 1: Operationalization of Variables 29

Table 3.1: Target Population 32

Table 3.2: Study Sample 33

Table 4.1 Response Rate 36

Table 4.2: Gender of the respondents 37

Table 4.3: Age of the respondents 37

Table 4.4: Highest level of education attained 38

Table 4.5: Form of ownership 40

Table 4.6: Promotional marketing strategies 41

Table 4.7: Price marketing strategies 42

Table 4.8: Product marketing strategies 42

Table 4.9: Place marketing strategies 43

Table 4.10: SMEs' Business Performance 44

Table 4.11: Reliability Analysis 45

Table 4.12: Regression Analysis 45

Table 4.13: R Square 47

Table 4.14: Analysis of Variance 47

LIST OF FIGURES

Figure 2.1: Conceptual Framework 28

Figure 4.1: Position in the Business..... 38

Figure 4.2: Type of business..... 39

Figure 4.3: Number of years the SMEs has been in operation 40

TERMS AND DEFINITIONS

Strategy: is the means by which an enterprise sets out to achieve its desired objectives (Kotler and Armstrong, 2006).

Marketing strategies: Defined as in a given market area, the proper allocation of resources to support enterprises to win competitively (Goi, 2005).

Performance: Refers to "how well the organization is managed" and "the value the organization delivers for customers and other stakeholders (Moullin, 2003).

Promotion Strategy: This refers to the deliberate effort to encourage customers to tell others about their services (Kotler and Armstrong, 2006).

Place Strategy: This is the strategy that relates to the ways in which customers can get product or services (Kotler and Armstrong, 2006).

Product Strategy: This is the strategy that deals with the physical appearance of the product, packaging, and labeling information, with an aim to influence whether consumers notice a product in-store, examine it, and purchase it (Kotler, 2007).

Price Strategy: This is a strategy that relates to costing of products with an aim to either attract or retain consumers (Duncan, 2005).

Small and Medium Enterprises: An enterprise is considered to be micro, small and medium enterprise (MSME) based on value of assets or number of full time employees. Sessional Paper No. 2 of 1992 and national baseline survey (1999), cluster enterprises in the following order; micro enterprises 1 – 9 employees, small enterprises 10 – 49 employees; medium enterprises 50–99 employees, large enterprises – 100 and above (RoK, 2012).

ABBREVIATIONS AND ACRONYMS

SME: Small and medium sized Enterprise.

GDP: Gross Domestic Product

ROI: Return on Investment

ROA: Return on Assets

ROS: Return on Sales

RBV: Resource Based View.

CHAPTER ONE

INTRODUCTION

1.1 Background of the Study

In the contemporary business environment, marketing is seen as a matrix of business activities planned to organize, manufacture, price, promote and distribute services, goods, and ideas for the contentment of pertinent clients and customers. Companies are continually faced with the need to meet the challenges that arises from the ever changing markets and continuous competition that companies face nationally, regionally and globally. As a result of competition that companies face in the market the need for companies to develop clearly defined strategies and plans have become important and necessary for any organization that intends to survive or grow. One of the important strategic directions that any company faces has to do with its market orientation and to an extension its marketing strategy.

A marketing strategy is a process that enables a company to use its limited resource to achieve maximum opportunities through increased sales and thereby giving an organization a competitive edge over other organizations. One of the main goals of any marketing strategy is to focus on customer satisfaction on one side and to channel organization energies and resources to increase sales and dominance in their market niche on another side. A good strategy for marketing merges development of products, promotion, pricing, distribution, relationship management and other elements. These marketing strategies of an organization are aligned to the process of defining how a firm will increase its market share, establish its presence, introduce new products and increase sales. The employment of marketing strategies is not only a preserve of large companies but SMEs too have increasingly adopted various marketing strategies.

The function of SMEs in development of economies cannot be underrated. Subrahmanya et.al., (2010) argues that economists, policy makers, and business experts acknowledge that SMEs are on the steering of economic advancement as they have contributed to over half of the GDP and provided an employment rate of over 60% in the so-called developed, high income countries. SMEs face stiff competition from larger corporations due to emerging innovations, technologies, and relaxing trade obstacles. As a result of this situation, SMEs find it difficult to survive or maintain their business status both locally and globally (UNCTAD, 2004). While it can be argued that SMEs performance is adversely affected in the international market, most of the ventures in this area in Africa and specifically in Kenya have, in their own petite way, adopted some strategies for marketing which have enabled them endure the stiff competition over the years.

As with larger companies, SMEs are faced with the need to survive and thus are required to generate sales and also have market for their sales. SMEs growth arises from their involvement in marketing activity that addresses: market share, market development, product promotion, product pricing, product differentiation and distribution**.** The small and medium-sized enterprises (SMEs) play a key role in economy of any country and thus the performance of SMEs is of significance to all the stakeholders. However, SMEs operate in a different environment unlike other companies. This raises the question about the marketing strategies that SMEs employ to compete with the large companies which have huge resources that they can employ in their marketing strategies. SMEs are faced with limited resources, expertise and marketing impact (Bennet, 2005). The Kenyan SME sector comprises of self-employment business and various

enterprises that are involved in different activities, with majority of the SMEs concentrated in urban areas.

SMEs in Kenya, like SMEs in other parts of the world are faced with the desire to grow and survive thus bring to question what marketing strategies have SMEs used to improve their performance given their financial constraints. According to Rugut (2012) majority of SMEs are increasingly adopting different marketing strategies to attract and retain their customers. Samli & Kaynak (1994) suggests that even though strategic marketing places a crucial role in the SMEs, many research activities in the sector of marketing practices in developing countries have laid their emphasis on macro issues and the management structure of an organization as the measure of performance in terms of market share, growth, efficiency and well-being of consumers and clients. According to Akinyele (2011), the static and macro analysis of marketing practices in developing economies, minimizes the impact of marketing environment on the achievement of performance measures and thus their recommendation for more studies to establish the impact of marketing strategies on SMEs performances in developing countries. In this context this study will be carried out to determine the impact of marketing strategies on performances of SMEs in Kenya.

1.1.2 Small and Medium Enterprises (SMEs)

Small and medium enterprises are widely recognized the world over for their role in the social, political and economic development. The importance of the sector is particularly apparent in its ability to provide reasonably priced goods, services, income and employment to a number of people (Kauffman, 2006). It is for this reason that there has been a growing interest and concern

by the government and development agencies for the improved performance and growth of the small and medium enterprises. Recent empirical studies show that SMEs contribute to over 55% of GDP and over 65% of total employment in high-income countries. SMEs and informal enterprises account for over 60% of GDP and over 70% of total employment in low-income countries, while they contribute over 95% of total employment and about 70% of GDP in middle-income countries (Schneider, 2006). The relative importance of SMEs and the informal sector (shadow economy) are inversely associated with economic development. In low-income countries, especially in the least developed economies, the contribution of SMEs to employment and GDP is less than that of the informal sector, where the great majority of the poorest of the poor make a subsistence level of living. An important policy priority in developing countries is to reform the policies that divide the informal and formal sectors, so as to enable the poor to participate in markets and to engage in higher value added business activities (Meyer-Stamer, 2004).

1.1.3 Firm Performance

Measuring business performance in today's economic environment is a critical issue for practicing manager. Business Performance is defined as the operational ability for companies to satisfy the desires of owners and shareholders. Performance measurement is the process to gauge performance in order to improve the quality and quantity of operations of organizations. Performance improvement cannot be realized without performance measurement which to different people mean differently. To some it means the use of financial index such as ROI (Return on Investment), ROA (Return on Assets (Equity), ROS (Return on Sales) while to others it can be measured through market share, customer retention or acquisition and also from

innovation of a firm (Atkinson, 2006). Measuring performance can also entail the use of parameters of effectiveness and efficiency with effectiveness referring to the meeting of stakeholder's expectations while efficiency refers to how well an organization is able to use its resources to meet stakeholder's expectations. According to Andrea and Campedelli (2011) performance measures include indicators such as profit growth, revenue growth and return on capital employed.

1.2 Statement of the Problem

Marketing strategy is a means by which firms respond to competitive market conditions. Traditionally, it has been decomposed into the four elements of the marketing mix, i.e. product, pricing, place and promotion. Any effective marketing strategy is expected to improve a company's output and hence it's competitive advantage. Different firms which include SMEs employ different sets of strategies that may determine their performance. However it is not clear what the effect of the different sets of strategy employed by SMEs in Kitengela have on their performance.

Marketing enables SMEs to improve the quality of their goods and services. Hence, the strong skills of marketing become inevitable for SME sector. The marketing function in SMEs is hindered by constraints such as limited access to resources, and a lack of marketing expertise on the part of the owner/manager, it is expected that SME marketing differs from marketing in larger organizations (Hill, 2001). Marketing strategy has been acknowledged to be important for SMEs. However the idea that business strategies have an impact on SMEs performance remains inconclusive. Whereas some researchers have reported a positive relationship between SMEs marketing strategies and its performance, others have concluded that it is the opposite. Studies by

Dzisi (2014) and Oyewale (2013) have reported the direct positive impact of market strategies on a SME performance. On the contrary Alberto & Gianluigi, (2013) indicate a negative impact of marketing strategies on the business performance of SMEs. The aforementioned studies indicate lack of clear relationship on marketing strategy and business performance of SMEs hence necessitating the need for further studies in different contexts in developing countries, Kenya in particular. Regionally a number of studies have been carried out on the relationship between marketing strategies and business performance of SMEs. These include Yang (2005) who carried out a study in China, with a focus on differentiation marketing strategy and product marketing strategy thereby excluding other marketing strategies. Dzisi (2014) also carried out a study in Ghana, with a focus on effect of traditional and nontraditional marketing strategies on growth of SMEs. This study was limited to traditional and nontraditional marketing strategies.

In Kenya, a number of studies have been carried out on impact of marketing strategy on business performance of SMEs. Muthee & Ngugi (2014) carried out a study in Kiambu town, with a focus on relationship marketing strategies. Waithaka et al (2014) also carried out a study with a focus on traditional and nontraditional marketing strategies. From the mentioned studies, it remains to be seen that there is a research gap on studies that have focused on the role of 4P's marketing strategy on business performance. Therefore the current study aimed to establish the impact of marketing strategies on the business performance of SMEs in Kenya.

1.3 Objectives of the Study

The main objective of this study was to establish the impact of marketing strategies on the business performance of SMEs in Kitengela Township.

The specific objectives of the study were:

i) To determine the impact of promotion marketing strategy on the business performance of SMEs in Kitengela.

ii) To determine the impact of price marketing strategy on the business performance of SMEs in Kitengela

iii) To determine the impact of product marketing strategy on the business performance of SMEs in Kitengela.

iv) To determine the impact of place marketing strategy on business performance of SMEs in Kitengela.

1.4 Research Questions

This study was guided by the quest to provide cogent answers to the following research questions, which were derived from the objectives of the study:

i) How does promotion marketing strategy affect the business performance of SMEs in Kitengela?

ii) How does price marketing strategy affect business performance of SMEs in Kitengela?

iii) How does product marketing Strategy affect business performance of SMEs in Kitengela?

iv) How does place marketing strategy affect business performance of SMEs in Kitengela?

1.5 Significance of the Study

The study sought to contribute to the knowledge base of SMEs' performance – an area that is not adequately handled in the literature. Specifically, the study has relevance to several parties.

Amongst them are the proprietors of SMEs who will find the findings of this study helpful and assist them to evaluate the effect of each of the studied marketing strategies on their businesses' performance.

Policymakers who guide small and micro enterprises would take the study as a guide in crafting policy which has the best implications on SMEs.

Marketing Professionals will practically utilize the actual strategies that are evaluated in this study. This study's findings would therefore guide them in creating winning marketing campaigns for their respective organizations.

Scholars and researchers would find this study a meaningful component of the available body of knowledge on the performance of SMEs. The findings of the study would also contribute to the literature review efforts of future researchers.

1.6 Scope of the Study

The geographical scope of the study was Kitengela Township, within Kajiado County. The study considered the relationship between marketing strategies and performance of SMEs with a focus on the following marketing strategies: place marketing strategy, product marketing strategy, price marketing strategy, and promotional marketing strategy. The study focused on formally registered SMEs that had been operational for at least one year. It was conducted over a duration of 3 months.

CHAPTER TWO

LITERATURE REVIEW

2.1 Introduction

This chapter focused on the literature of the study and is divided into several parts. These include: theoretical framework, empirical review, conceptual framework, and operationalization of variables.

2.2 Theoretical Framework

A company's success is dependent to a greater level to the degree of an organization awareness of customers, competitors and moderation factors in the market. The needs of customers, competitor's strategies and moderating factors are always changing thus necessitating that an organization keeps up to date with such changes. These changes may include change of prevailing market conditions, technological changes among others. Recognizing and developing new strategies by companies, including marketing strategy is key to countering such changes. The development of marketing strategies can be aided by marketing theory that gives attention to customer needs and competitors strategies. According to Blankson and Cheng (2005), the marketing concept determines the success of an organization and the degree to which an organization pursue its marketing concept more effectively and efficiently holds sway in a firm profitability and performance.

The study was based on the market orientation theory which underlies modern thought in marketing and proposes that sucessful firms should be able to know customers needs and wants with an aim of satisfying them effectively than its competitors. Market orientation theory is

conceptualized along three dimension which are customer orientation, competitor orientation, and inter functional coordination.

2.2.1 Resource Based View Theory (RBV)

The resource-based view (RBV) of the firm argues that competitive advantage and hence performance depend on resource endowments (Hooley & Greenley, 2005). Newbert (2007), in his review of empirical research on the resource-based view of the firm, emphasizes capabilities rather than resources, in terms of relevance and potential impact on performance. Resources per se cannot do anything. What is important is the capacity to utilize resources effectively, that is, a capability. Recent work (Liao, et al 2009) also emphasizes the greater relevance and importance of capabilities compared to resources.

According to Julian (2006) marketing capabilities can be found both in large and small business, with capabilities including market sensing and customer relationship capabilities. Thus marketing capabilities has been used to explain the relationship between marketing strategies and performance of SMEs. This is attributed to the fact that marketing capabilities may include both tangible and intangible assets which SMEs may have. RBV identifies that some possessions may lead to attainment of organizational goals, while others do not. Therefore, the fundamental challenge is for the organizations to identify those resources that will lead to goal realization of the overall performance (Wade & Hulland, 2004).

Hence, RBV tries to build on internal competence of organizational resources for such an organization to achieve competitive advantage. Julian, (2006) posited that firm's sustainable

performance advantage by securing rare resources of economic value and the ones that competitor and other rivals cannot easily copy, imitate or substitute. These resources include the following: resources that are valuable; resources that are rare; resources that are imitable; and resources that are non-substitutable.

Market strategy includes strategies that entail the creation of superior products and services to improve performance of SMEs. Thus the emphasis is on attracting and retaining customers through quality and superior products than what its competitor's offers. Therefore, a good marketing strategy should be able to give SMEs competitive advantage over other SMEs through the use of its capabilities which are unique to itself, environment, industry, size and resources. To understand the contribution of marketing strategies to the business performance of SMEs it is important to understand the capabilities of SMEs, and this include their marketing capabilities despite meager resources. This role is better understood through RBV theory that focuses on the importance of resources and capabilities to SMEs, and thus this theory will be central to the study.

2.2.2 Marketing Orientation Theory

The study will also be based on the market orientation theory which underlies modern thought in marketing and proposes that sucessful firms should be able to know customers needs and wants with an aim of satisfying them effectively than its competitors. Market orientation theory is conceptualized along three dimension which are customer orientation, competitor orientation, and inter-functional cordination. Customer orientation is concerned with the understanding of buyers with an aim of continuously creating value. It involves a set of behavior that involves

acquiring, disseminating, and processing customer information and with effectively reacting, responding, and supporting customer feedback (Kohli et al, 2003). Thus market orientation theory is more concerned with understanding the buyer's entire value of chain and using of such information by a company to achieve market advantage. Firms that have good market orientation are able to achieve higher market performance which result in stronger business performance.

Organizations with stronger customer orientation positively foster more value related to market tracking and offer greater value to their customers. Accordingly, customer-oriented organizations tend to obtain information about current and latent customers' needs, understand the expressed desires, needs, and demands of the customers in their served markets and develop products and services that satisfy those desires. A seller generates value for buyer only through two methods: by increasing buyers' interests with regard to costs and by decreasing buyers' costs with regard to interests (Narver and Slater, 2010). Competitor orientation refers to a company's knowledge on strength, weakness, strategies and capabilities of its competitors. Competitor orientation is focused with the knowledge of other firm's weakness and strength all with an aim of understanding their shortfall. It encourages innovation through product marketing which is a key component of any marketing strategy, and indirectly it leads to better market performance of a firm (Asgar, 2013).

The last component of market orientation theory is inter-functional coordination. It focuses on improving the coordination on various systems of a firm to enable it to communicate, think, and work together to achieve its objectives, effectiveness, competitive advantage, and performance. It entails the coordinated effort of an organization to create superior value for the target and

potential customers thus satisfying the needs, wants and demands of customers. This component of market orientation theory plays an important role in the adaptability and flexibility of a firm in improving its market performance and by extension its business performance amidst all competition (Powpaka, 2006).

2.3 Empirical Review

There exists a number of studies that have focused on the relationship between marketing strategies and performance of small and medium enterprises. A review of literature on such studies is provided in the section below:

2.3.1 Promotion Strategy and Firm Performance

Promotion is a variety of techniques used for creating positive images of the commodity being sold in the minds of prospective buyers. Advertising, public relations, personal selling, and discounts are the major components of promotion. Advertising which is considered the most powerful element of promotion strategy is a sponsored public notice whose aim is to inform, convince, and otherwise modify the attitudes of consumers towards a particular product, with the aim of educing an eventual purchase (Robbins and Coulter, 1999). The major promotional tools include trade promotion, consumer promotion, and sales-force promotion. Consumer promotion refers to coupons, prices off, cash refund, samples as well as free trials. Trade promotion refers to free goods and advertising. Sales-force promotion refers to contest for sales reps, specialty advertising and trade shows.

Zeithaml *et al*. (1995) describes promotion as part of specific effort to encourage customers to tell others about their services. Promotion is a key practice that facilitates the process of market exchange between stakeholders and the public at any given time. As a result every firm must position itself as either a promoter or communicator with an aim of creating an optimal mix of marketing communication tools that will enable product be a brand in the market. Promotion holds a central role in the product marketing mix that any company may use to pursue its marketing objectives and advertising, (Kotler, 2007). Study by Francis and Collins-Dodd, (2004) has shown that there is a relationship between promotion and the performance of business. Van Scheers and Radipere (2008) mentions that advertising can be used by SMEs, and like other large firms this can result in giving SMEs competitive edge.

Ramsey (2012) carried out a study among SMEs marketing strategies on the impact of internet-based technologies (IBTs) on the customer relationship management (CRM) activities (i.e. e-CRM) of SMEs in Ireland. The methodology involved mixed methods approach incorporating an online questionnaire, qualitative in-depth interviews and projective techniques were adopted. Factor analysis was carried out on 286 respondents, which led to communication with customers and the management of customer information being distilled as key areas within e-CRM in SMEs. Findings showed that to a varying extent, SMEs were adopting relatively simple IBTs to improve customer communication and information management capabilities and to create competitive advantage through e-CRM. SMEs find the communication aspect of e-CRM easier, but struggle to integrate customer information into their decision making. One of the major marketing mix that many researchers assessed is Promotion. The aim of their assessment was to

confirm if there is any connection between promotion and market share and to determine how proper promotion would raise profit and sales.

According to Thirkell & Dau, (1998) Promotion is relatively effectual to the campaigns of competitors. According to Leonidouet al. (2002) the most widely researched component of promotion was advertising. The studies majorly scrutinized the procedures of advertising through which the company can enlighten, launch, remind or encourage clients and therefore make more sales and enhance profit. The magnitude of advertising on performance of exports was observable in firms that implemented sound advertising and therefore recorded an increase in sales. According to Lee & Griffith (2004), the firms which are more committed to their target market employed more advanced level of advertising in contrast to less committed firms that used advertising of a lower degree.

Eusebio et al., (2007) carried out a research on the perception of management and strategies of marketing in performance of exports via relative analysis in Spanish and Italian textile industry. The results indicated that the commercial branch is one significant component in promotion strategy. Leonidou et al., (2002) researched on marketing strategy: a meta-analysis regarding prior studies. In the re-examination of studies, promotion-related variables were divided into sale promotion, individual selling, advertising, individual visits, trade fairs and promotion adaption.

Sales promotion, including samples, premiums, coupons and other tools of promotion is handy in economies of low income or markets with advertising limitations and high competition. In markets that have advertising restrictions and the cost of managing a working force is low, personal selling is very beneficial. Personal visits can raise the market shares due to its ability to

personalize relationships, increases communication, enhance experiences about opportunities or problems and provides a timely response. Nassimbeni, (2001) conducted a research on exporters in Italy which showed that instead of non-exporter, exporter companies have a tendency to use commercial intermediaries such as commercial agency and firms in an export market.

Finally, Fizebakhsh, (2002) in his study investigating effective factors on a marketing mix revealed attendance in fair, send catalogue, online advertising, journals and TV channels, marketing directly, giving an agency to foreign companies, having an international seal manager would raise the performance of exports. On another hand, Eusebio et al., (2007) argued that more investment in promotional activity did not show any noteworthy effect on market share.

2.3.2 Pricing Strategy and Firm Performance

According to Kotler (2007), price is the cost of producing, delivering and promoting the product which is charged by the company. Penetration pricing strategy is one of the most effective marketing strategies available to SMEs. Pricing strategy entails setting a low entry price for a new product or brand in order to gain a breakthrough in a highly competitive market. The strategy can also be used when introducing a completely new product in the market or when tapping a new market segment for an existing product, (Vikas, 2011). A company employs penetration pricing with the expectation that eventually the price will be raised once the initial marketing objectives are fulfilled. Its aim is to attract the customers to try the company's product. By keeping the price intentionally lower than established competitors, the business aims to compromise existing brand loyalties of the customers.

The final aim of penetration strategy is not maximization of profits, but allowing new products or brands to gain a foothold in the market place (Vikas, 2011). Gottfried and Hans, (2008) suggests that this strategy enables the firm to initially implement low prices so as to speed up adoption or establish a de facto standard. Based on Tellis (2006), the penetration strategy is always successful at companies that experience cost advantage due to scale. The supporting situation to undertake penetration pricing involves minor product revision, low product differentiation, elastic demand and low factor capacity utilization (Noble and Gruca, 2009). The strategy is commonly associated with increase in sales volume. Price control is both a key component in competitive and marketing strategy as well as a key determinant of performance. According to Shipley and Jobber (2001) price is the gauge used by commercial and industrial customers to judge the worth of an offering, and it strongly has impacts on selection of brands among competing alternatives. Apart from world-class product development, pricing is key to success. Pricing is fundamental in capturing and attracting demand. It is also crucial in optimizing the true value of your products in the real market place (Yeoman and McMahon, 2004).

Furthermore, pricing is the firm's only revenue generating marketing mix element as well as the most flexible component of this mix in the sense that pricing decisions such as price changes can be implemented relatively quickly and be adapted easily to the conditions surrounding a company's internal or external environment (Lewengart and Mizrahi, 2000). The company's objective functions are multifaceted in that the company's viability rests on a combination of different pricing objectives (Diamantopoulos, 1991). According to Shipley and Jobber (2001), the objectives are flexible and change over time due to organisational and environmental conditions. Pricing goals can be supportive or conflictual, therefore there are goals that are

compatible with each other e.g. increase of sales and market share and opposing objectives such as maximization of sales versus maximization of profits (Myers, *et al.*, 2002).

A number of studies have been conducted on pricing strategies, with each research giving it a different approach, applying a different methodology and hence resulting to varied findings. Paul and Ivo (2013) used the survey method and hypothesis testing on 95 respondents to demonstrate the relationship between price strategies and price setting practices. The survey demonstrated that there is a connection between price strategies and price setting because price setting practices are used to implement price strategies. Howard and James (2013) based their study of the effect of decision context on perceived risk in pricing strategies on attribution theory where more than 100 business managers were used and findings suggest that when uncontrollable environmental factors dominate pricing, managers tend to select pricing strategies with external orientations to deflect risk away from themselves personally. Hulya (2011) carried out a study in Turkey to identify major dimensions of entrepreneurial marketing concept in boutique hotels and determine to what extent current marketing approaches in boutique hotels seem to be consistent with the entrepreneurial marketing approaches. The major motivation of this research was stemmed from the fact that the empirical examination of the notion of entrepreneurial marketing from the viewpoint of boutique hotels has received scant attention in the relevant literature. The research was conducted with semi-structured interview method in nine boutique hotels located in the province of Izmir in Turkey. Based on seven dimensions of entrepreneurial marketing concept, a unique semi structured interview form was designed. Results pointed out that entrepreneurial marketing concept which carries great importance for small and medium hotels has been well adopted and put into effective use by boutique hotels.

A study was conducted by Kostis and George (2011) on new pricing strategies on industrial service and their background. Data collection was conducted through a mail survey from 48 information technology and 129 transportation firms. The initial phase of the survey involved 20 in-depth personal interviews which concluded that penetration pricing and skimming pricing relate to the company's marketing and corporate strategy and the service characteristics, whereas conditions of the market influence the adoption of pricing akin to competitive prices.

Different studies have established that price has a significant relationship on business performance (Colpan, 2006; Owomoyela *et al*, 2013). Makgoe (2008) argues that location of SME can have a significant effect on costs. This is because the location of an SME determines transport and distribution costs that will be incurred in the process of delivering products to consumers. The implications of distribution cost are that the price of SMEs would be priced above what consumers can be able to afford and this would have a negative impact on SMEs (Laljit, 2006). A study by Jones (2010) on entrepreneurial marketing in small businesses in UK proposed further development of the concept of entrepreneurial marketing towards the concept of entrepreneurial marketing orientation. Drawing on the earlier research and scales in the entrepreneurial orientation, market orientation, innovation orientation and customer orientation literatures, the study proposed a conceptual model for entrepreneurial marketing that identifies the components of such a model, together with specific indications of the overlap between scales in the different areas. The study implicitly suggested that marketing in SMEs is intertwined with other activities and behaviours in the small business enterprise, and argued that in order to understand marketing in SMEs it is essential to understand its context, specifically in relation to customer engagement, innovation and entrepreneurial approaches to marketing (Jones, 2010).

2.3.3 Product Strategy and Firm Performance

According to Kotler and Armstrong (2006), a product is anything that can be availed to a market for acquisition, attention, use or consumption that might fulfill a want or a need. Product strategy is normally conceptualized on the basis of two fundamental decisions. First, product market scope, which deals with the scope that a firm intends to target broad groups of clients or to focus more narrowly on a smaller number of segments (Vorhies *et al*.2009). Second, the value proposition to be delivered, which concerns the benefit bundle by which business seeks to attract and retain target clients and attain its strategic objectives (Slater and Olson 2001). Value propositions contain two core components of product market strategy: the relative superiority of the business' s product and service offerings, regarding the degree to which a business focuses on creating superior products and service quality, brand and the performance benefits for target clients relative to those offered by competitors; and the cost of delivering its products and services to target customers, concerning the scope to which the business center on actions and resource deployments that lower the cost of delivering its products and services. Waithata *et al* (2014) in a study aimed at determining effects of marketing strategies on the growth of small businesses in Kenya with reference to Businesses at Kariakor Market in Nairobi. The study found out that use of various marketing strategies affect the growth of small businesses**.** The study recommended that it is not only important that businesses advertise but also be able to choose the right media to reach as many people as possible. The study acknowledges that word of mouth could only be effective if the quality of goods is good and that the customers are highly satisfied.

The study established that SMEs establish the right contacts to help the business in its growth and also create a good and a strong customer base. The business also identifies the best social media strategy that is easy to use and one that can easily be accessed at very minimal cost.

Clients purchase commodities often, with careful planning and by comparing varieties based on price, quality and style and thus the physical appearance of product and labeling information can influence one's decision to buy, (Mohammad *et al*, 2012). Studies by (Kemppainen & Tinnilä, 2008; Owomoyela *et al*, 2013) have established that product strategy is associated with business performance. Product dimensions are an important part of a marketing mix. Leonidou, et al., (2002) have studied about marketing strategy: a meta-analysis concerning previous studies. They synthesized empirical studies about marketing strategy and concluded that product design, brand mix (name, sign, symbol, design, warranty, and customer service and product advantages) are variables of product marketing strategy. Tantong, *et al.,* (2010) found that product design adaptation strategy was positively related to firm performance. Cavusgil and Zou (2004) Lee and Griffith (2004) observed that better performance of firms can be realised by adapting the product to meet requirements of export customers. Lages et al. (2004) study showed that product and service quality were the main determinants and design, brand image, innovation and product differentiation were found as other determinants. This outcome is the same as previous findings obtained by Morgan et al., (2004) who revealed that quality of products was major determinant of a share market.

A study by Miller (2009) found out that new product development strategy influences the growth of SMEs in many African countries. The study noted that innovativeness contributed to new product development in many African countries such as South Africa, Nigeria and Kenya. Baker

(2008) conducted a study on enterprise success factors in Small and medium enterprises (SMEs) in Gauteng, South Africa, it was concluded that there is lack of technical and managerial skills in SMEs.

Kotler (2010) carried out a study on entrepreneurial marketing in USA which identified that entrepreneurial marketing is based upon how marketing practices becomes more formalized. The study noted that three stages of marketing practice are identified as organizations grow. Entrepreneurial marketing is related to the first development phase where the level of entrepreneurship is high and the degree of formalization of marketing practices is low. Later and in a more mature stage (second and third stage), marketing practices become formulated marketing. Kotler (2010) study noted that when small companies achieve success, they inevitably move toward more formulated marketing Thirkell and Dau, (1998) found that quality and service have significant and positive correlation with performance of the firm. Also Lages et al., (2009) investigated a relationship on quality, capabilities, and innovation via a questionnaire through two types of respondents from the same Portuguese company. They observed that product quality and product innovation were acknowledged by managers and academics as top determinants and product innovation and product quality led to enhancement of firm performance. Haque et al. (2002) in their research on performance of exports and marketing opportunities of Malaysian ready-made garment products concluded that diversification of products is very important. Finally, Fizebakhsh, (2002) analysis on a marketing mix showed that the existence guaranty for quality of products, popularity of brands, product diversification, packaging and quantity or volume of product production were effective factors that influenced

the market share. Lages et al. (2009) suggested that only product innovation had a positive effect on economic performance in modern international markets.

2.3.4 Place Strategy

"Place" refers to the channels of the distribution used to deliver commodities to customers. Distribution will be greatly influenced by the product being distributed. For instance, if you own a small retail shop or provide services to the immediate local community, then you are at the tail of the distribution chain, and so your supply will be direct to the consumer. Businesses that assemble or create a product will have two options: direct sale to the consumers or selling to a vendor.

Producers must decide if direct supply is appropriate for their products or whether sales through retail, mail order, e-commerce, door to-door services, on-site, or some other method are more suitable. Direct sales have the added advantage of face to face contacts with customers. With this face to face contact it’s easy to identify changes in the market and easily adapt to them. Selling directly is most appropriate at the initial stages of supply or in case the goods are limited or seasonal. For instance, selling most home-produced commodities can occur through home-based sales, stands and markets. However, Bowrsox and Closs, (2006), argues that selling directly demands that the business should have a successful retail interface with customers, which may be in person or electronic. The decision of where a firm should sell its products is the question raised under the P of place of the marketing mix. Place strategies can be classified as exclusive, selective, and intensive, which are connected to what kind of image a company wants to have. Exclusive means few places and selling only one brand. Selective is the middle way, where the

products are sold at selected places that could be outside the company but with high collaboration between the two parties. Intensive strategy is just a matter of being visible and available everywhere and is most used by low-price/high-volume strategies (Parment, 2008).

According to Jones, (2007) place is any way through which a customer can obtain a product or receive a service. This according to Bowersox and Closs (2006) has been described as the distribution system of any product. This according to them is the third component that forms up the marketing mix, and relates to the process of making the products available to consumers. Kotler and Armstrong (2006), defines place strategy as a strategy that focus on making product available through establishing effective distribution channels for products. Place strategy has been established by Owomoyela et al, (2013) to be having significant effect on business performance. Place has an influence on the marketing strategies of SMEs. This is because SMEs operate in global, regional and local environments which have an impact on their growth. According to Diale (2008) SMEs performance is related to its location and it comes with cost implications on social, technological, economic and political factors.

2.4 Business Performance

The measure of business performance is a critical issue to business practitioners and various scholars; with the general agreement that business performance refers to the operational ability of firms to meet the aspirations of investors and owners. Business performance is measured by a number of indicators such as profit, return on investment (ROI), turnover or number of customers, design quality and product improvement (Wood, 2006). On a different note Franco Santos et al. (2007) proposes that business performance can be measured through business

performance system with the system categorizing business performance into operational business performance and strategic business performance. This system consists of performance measurement of an organization at high or low level and has even been applied to the measurement of small and medium business. This is because the system makes use of both quantitative and qualitative research methods (Gruber et al., 2010).

The measurement of performance of SMEs has not been without difficulty since SMEs are always reluctant to publicly reveal their actual performance and this has raised the question on performance measures that can be used in SMEs. Measurement of SME performance is usually challenging and fraught with difficulties. This is for reason that the performance measurement tools were designed for use in large firms and not small firms. Due to challenges associated with objective performance there has been a shift to both objective and subjective measures of SMEs performance. There are a number of studies that have shown bias towards the use of subjective measures for assessing business performance. This has been attributed to lack of financial data or even in cases where data is available the data may not fully reflect the true position of the SMEs. As a result subjective measures have been found to be an effective way to analyze business performance since they allow comparison of firms within their context. This allows practitioners and managers to compare their firms with other firms in their industries (Song et al., 2005).

Due to incompatibility of available data with analysis required, many researchers have opted to turn to subjective measures to enable the understanding of firm's condition (Kim, 2006). Another difficulty in the use of objective performance measurement of SMEs emanates from the fact that performance measurement may be misleading if only objective measures are used. This is

because firms may be measured to be performing poorly and this may not be the cause due to their commitments such as research and development.

2.4.1 Performance Measurement in SMEs

Based on Garengo *et al*. (2005), there are eight previous PMS models that have been widely used. These models include: Performance measurement matrix; Performance pyramid system; Performance measurement system for service industries; Balanced Scorecard; Integrated performance measurement system; Performance Prism (Neely, *et al*., 2002); Organizational Performance measurement (Chennell *et al*., 2000) and Integrated Performance measurement for small firms. The last two performance measurement models are commonly used in SMEs.

Organizational Performance measurement was developed specifically for SMEs and is based on three principles: Alignment, i.e. the selected performance measures support the alignment between people's actions and company strategy; Process thinking, i.e. the measurement system makes reference to the process of monitoring, control and improvement systems; and practicability, i.e. at any level in the company there is a consistent process for identifying measures that should be considered and for ensuring the quality and suitability of data(Song et al., 2005).

Integrated Performance Measurement for Small Firms is specifically designed for SMEs. It is based on seven main dimensions of measures, classified as two external dimensions (financial performance and competitiveness) and five internal dimensions (costs, production factors, activities, products and revenues) that are connected by a causal chain. The internal dimensions

are used to monitor the whole production process, and the external dimensions are used to monitor the company's position in its competitive context (Neely, *et al*., 2002).

Analyses of these models show that performance measurement must be aligned with strategy (Balance Score Card, Results and Determinants, Performance measurement Matrix, Performance Prism, Performance pyramid) and have multi-dimensional measures (BSC, Results and Determinants). The multi-dimensional measures are particularly important and help to overcome the limitations of traditional performance measurement systems that only focus on the financial dimension. In this study performance will be measured through growth in terms of size of the firm, branches the firm establishes, market share/customer base (Miller, 2009).

2.4.2 Marketing Strategy and Business Performance

In the formulation of an effective marketing strategy, there are several forces that affect the performance of business. However, previous studies have indicated that the use of marketing stra tegy delivers a significant effect on the performance of firms. The effect of marketing strategy on performance of business differs depending on the nature, size and environment of the business. Thus marketing strategy benefits to business performance have been felt on sale volume, profitability, and market share that it created. Through measurement on the three areas business can create a marketing strategy that increased impact on sales, profitability or market share. Significantly, business engage in marketing strategy in order to avoid the effects of the recessions since the aim of any business is to survive in face of existing competition. Firms that value the importance of marketing in their system are proactive and develop marketing strategy

which takes the form of marketing segmentation, positioning and branding, and marketing communications (Jones, 2010).

The effects of the marketing strategy, according to the previous studies, can be reflected on the firm's performance. The appropriate marketing strategy relevantly creates impact in making process towards the competence and develops a relationship in the organizational culture (Sung-Joon and Sung-Ho, 2005). The benefits of the marketing activities in the business reflect in the strength of the industry to eliminate or at least minimize the effects of various challenges. The influence of marketing activities can be part of the culture of the organization and can be the basis for actions that the leaders will create in the future (Krohmer, Homburg, and Workman, 2002).

2.5 Conceptual Framework

This framework depicts the relationship between the dependent (Business performance) and independent variables (marketing strategies) of the study.

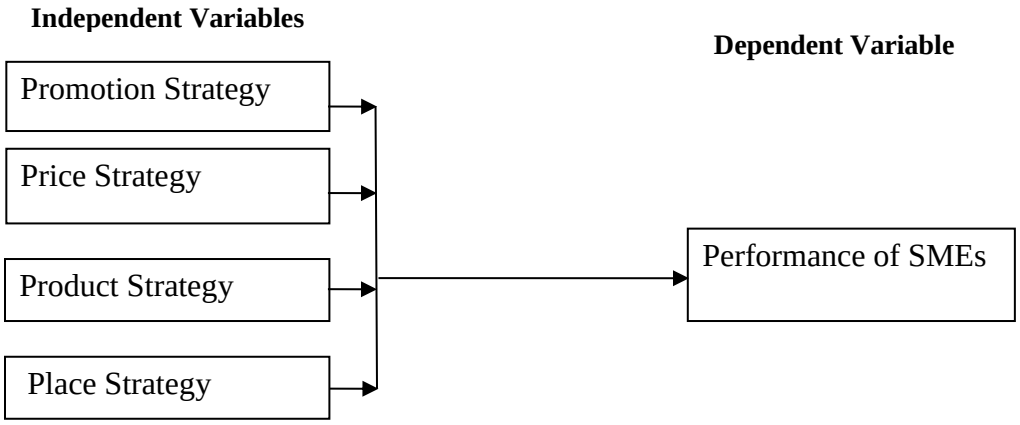

Figure 2.1: Conceptual Framework

2.6 Operationalization of Variables

The variables of this study were operationalized as per table 2.1 below:

Table 2.1: Operationalization of Variables

Variable	Measurement
Promotion Marketing Strategy	Effect of special offers of the products on performance of SMEs.
	Impact of billboards and other promotional materials on SME performance.
	Effect of product branding on business performance of SMEs
	Effect of social media marketing on SMEs performance.
Price Marketing Strategy	Impact of setting the same prices as competitors on the performance of the business.
	Whether lowering of the prices can lead to better long term SME performance.
	Whether allowing customers to negotiate prices is good for the performance of businesses.
	Effect of discounting prices of different products occasionally on business performance enhancement efforts.
Product Marketing Strategy	Whether introduction of new products periodically is good to the business.
	Whether stocking of diversified products can increase the revenue of a business.
	Perceived effect of concentration on only one main product.
	Perceived effect of packaging to the appeal of the product, and hence its demand.
Place Marketing Strategy	Whether use of innovative distribution channels has a positive impact on business performance.
	Perceived implications of business location on its success.
	Whether direct sales have a noticeable impact on business performance in SMEs.
	Whether use of a variety of distributors affects SMEs performance.
Business Performance	Profitability.
	Operations efficiency.
	Business development.
	Customer growth.

2.7 Research Hypothesis

The research tested the following four null hypotheses in a bid to provide a solution to the research questions:

H_{01}: Promotion marketing strategy does not affect business performance of SMEs in Kitengela.

H_{02}: Price marketing strategy does not affect business performance of SMEs in Kitengela.

H_{03}: Product marketing strategy does not affect business performance of SMEs in Kitengela.

H_{04}: Place marketing strategy does not affect business performance of SMEs in Kitengela.

CHAPTER THREE

METHODOLOGY

3.1 Introduction

This chapter describes the methodology that was used and the areas focused on in the study. It includes: research design, target population, sampling size and techniques, data collection, reliability and validity analysis, and data analysis.

3.2 Research Design

The research used a descriptive research design because it provides an accurate estimation of the association between market strategies and the performance of SMEs in Kitengela (Creswell, 2003). This design also allows the researcher to collect both quantitative and qualitative information that captures information on the demographic characteristics of the population studied within a short time and at minimal cost.

3.3 Population of the Study

According to the National Chamber of Commerce (2015), there are 62 SMEs operating within Kitengela Town's Central Business Dustrict. These SMEs formed the target population of the study. The unit of study were the owners, managers, or senior staff of these SMEs. These three categories of staff were targeted because they could provide insightful information required to meet the research objectives. The SMEs selected for this study were drawn from the following categories: hardware shops, motor vehicle repairs, hotels, general retail shops, baby care shops, wholesale shops, supermarkets, small scale manufacturers, and others (e.g. bars, restaurants etc).

Table 3.1: Target Population

Business Type	Frequency
General Retail Shops	7
Hardware Shops	15
Wholesale Traders	4
Baby Care Firms	2
Supermarkets	5
Hotels	11
Motor vehicle Repair Shops	10
Manufacturing Firms	3
Others	5
Total	**62**

Source: Kajiado County, Chamber of Commerce

3.4 Sampling Design

A Census approach was used to assess the target population of this study, i.e. data was collected from all the targeted (62) SMEs in Kitengela Township since they were not very many Three respondents were selected from each SME using a purposive approach to bring the total sample size to 186 respondents. Participating respondents from each SME were selected purposively because it allowed the researcher to select respondents who were able to provide information that could meet the objectives of the study. In addition, this sampling procedure was used to minimize costs and time wastage in data collection.

Table 3.2: Study Sample

Business Type	Frequency	Sampled Respondents
General Retail Shops	7	21
Hardware Shops	15	45
Wholesale Traders	4	12
Baby Care Firms	2	6
Supermarkets	5	15
Hotels	11	33
Motor vehicle Repair Shops	10	30
Manufacturing Firms	3	9
Others	5	15
Total	**62**	**186**

3.5 Data Collection

The study used primary data obtained from the owners and staff of SMEs. The data was collected using a semi-structured questionnaire through a face to face interview. The questionnaire was divided into sections based on the objectives of the study. The questionnaire method was adopted because it allows data to be collected from many respondents within the shortest time possible thus minimizing costs and time. Primary data on the impact of the marketing strategies on business performance of SMEs was obtained from management staff and owners using a structured questionnaire. Management/Owners were purposively selected to provide data because they deal with policy formulation.

Questionnaire was developed from the review of literature related to the study variables and comprised six sections: Section A contained questions to capture general information of the respondents and SMEs while Section B comprised of questions on promotion Marketing Strategy and Business Performances. Section C comprised of questions on price Marketing Strategy and business performance. Section D focused on product market strategy and business performance

while Section E focused on place marketing strategy and business performance and Section F on Business Performance of SMEs.

3.6 Reliability and Validity

Reliability is the degree of consistency and precision in which the measuring of the instrument demonstrates under same circumstances, same research respondents using the same instrument and should generate the same results under identical conditions (Amin, 2005). In determining reliability of the instrument, the researcher carried out a pilot study among 20 SMEs in the neighbouring Isinya town. This was to help in finetuning the research instrument and improving its utility in collecting data for the actual study. Validity is an indication of how sound the research will be. The validity of the instrument was measured using the content validity, which refers to the ability of the instrument to cover all possible aspects of the research topic. To ensure content validity of the research instrument the researcher incorporated the opinion of research experts and his supervisor in designing the questionairre.

3.7 Data Analysis and Presentation

Data collected was cleaned to check for completeness and consistency before final analysis was conducted. Complete data were then coded and entered into Statistical Package for Social Sciences and analyzed. The data collected was analyzed using descriptive statistics and presented through charts, tables, frequency distribution and percentages. The study used a multivariate regression model to determine the relationship between the dependent and the independent variables. The dependent variable in the study was the performance of SMEs while independent variables were the marketing strategies which comprise the marketing mix.

The multivariate regression model for this study was:

$$Y = \alpha + \beta_1 X_1 + \beta_2 X_2 + \beta_3 X_3 + \beta_4 X_4 + e \quad \text{.....(i)}$$

Where:

Y= the dependent Variable (performance of SMEs)

α = Constant term for the independent variable

B_1 = Coefficient of X_1

X_1 = Promotion Market Strategy

B_2 = Coefficient of X_2

X_2 = Price market strategy

B_3 = Coefficient of X_3

X_3= Product market strategy

B_4 = Coefficient of X_4

X_4= Place market strategy

e = The error term

CHAPTER FOUR

FINDINGS AND DISCUSSION

4.1 Introduction

This chapter focuses on the analysis of the data collected from the field as well as the discussions of the findings. The results of the study are based on the general objective of the study which was to assess the impact of marketing strategies on the performance of the SMEs. The results of the study are presented in both tabular and graphical formats.

4.2 Response Rate

Out of the 162 sampled respondents, 149 respondents returned duly filled questionnaires. This means that the response rate of the study was 91.97%. According to Mugenda and Mugenda (2003) a 50% response rate is adequate, 60% good and above 70% rated very well. Kothari (2004) also asserts that a response rate of 50% is adequate, while a response rate greater than 70% is very good. As such, the response rate of this study was deemed satisfactory.

Table 4.1 Response Rate

Response Rate	**N**	**%**
Returned	149	91.97%
Not Returned	13	8.03%
Total	162	100%

4.3 Demographic Characteristics of the Respondents

This section describes the general demographic information of the respondents as derived from the analysis of the study's data.

4.3.1 Gender of the Respondents

As shown in Table 4.2 below, of the 149 respondents, 52 were female and 97 were male. This accounts for 35% and 65% of the total respondents respectively. This finding is in line with the general societal trend that most senior staff in SMEs are men.

Table 4.2: Gender of the Respondents

Gender of Respondents	N	%
Male	97	65%
Female	52	35%
Total	149	100%

4.3.2 Age of the Respondents

The respondents were distributed across various age brackets as evident in table 4.3 below. Majority (42%) of the respondents were aged between 36 and 50 years. People aged below 35 years made 38% of all the respondents and 16% were between 51 and 65 years. Only 5% were above 65 years

Table 4.3: Age of the Respondents

Age	**N**	**%**
Below 35 Years	56	38%
36-50 Years	62	42%
51-65 Years	24	16%
Above 65 Years	7	5%
Total	149	100%

4.3.3 Highest Level of Education Attained

Table 4.4 below shows the distribution of respondents based on the highest level of education attained. It can be seen from the results that majority of the respondents (44%) had upto high school education, 34% had upto diploma education, and 20% had upto degree level of education.

Very few respondents (2%) had only primary education and only 1% had postgraduate education.

Table 4.4: Highest Level of Education Attained

Highest level of education	**N**	**%**
Primary	3	2%
Secondary	65	44%
Diploma	51	34%
Degree	29	20%
Postgraduate	1	1%
Total	149	100%

4.3.4 Position in the Business

Among the respondents, 41.61% were owners of the businesses, 36.91% were managers, and . 21.48% of the respondents were employees.

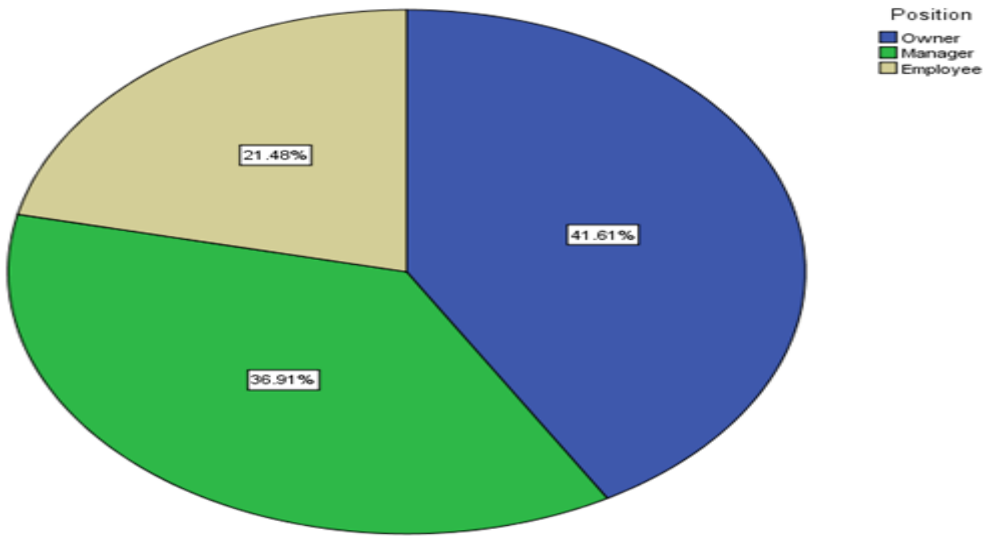

Figure 4.1: Position in the Business

4.3.5 Types of Businesses

Various businesses were represented. Majority (31%) of the sampled SMEs were hardware shops, 20% were supermarkets, 16% were motor vehicle repairs, 15% were hotels, 8% were general retail shops, 2% were manufacturing firms; both baby care and wholesale firms accounted for 1% of total firms while 6% were others (e.g. bars, restaurants, clinics etc).

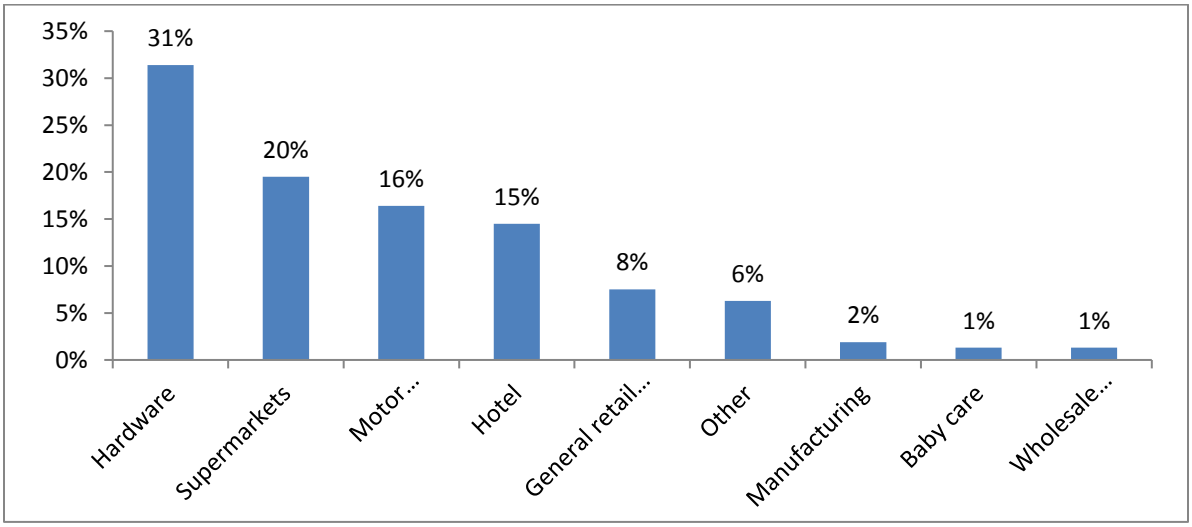

Figure 4.2: Types of Businesses

4.3.6 Form of Business Ownership

The study queried the form of ownership of the sampled SMEs in Kitengela. Most businesses (68%) were under the sole proprietorship form, 15% were family businesses, 13% were jointly owned (partnerships) businesses, and 3% were Limited Liability Company (Table 4.5). This indicates that sole proprietorship is still the common form of ownership among SMEs.

Table 4.5: Form of Ownership

Form of ownership	N	%
Sole proprietorship	101	68%
Family business	23	15%
Partnership	20	13%
A limited liability company	5	3%
Total	149	100%

4.3.7 Number of Years the SMEs has been in Operation

The study further established that 97% of the SMEs had been in operation for between more than three years. Among them, 36% had been in existence for between 6 and 7 years, 34% had been operational for between 3 and 5 years, while 27% had existed for more than seven years. Only 3% had been operating for two or less years (Figure 4.3).

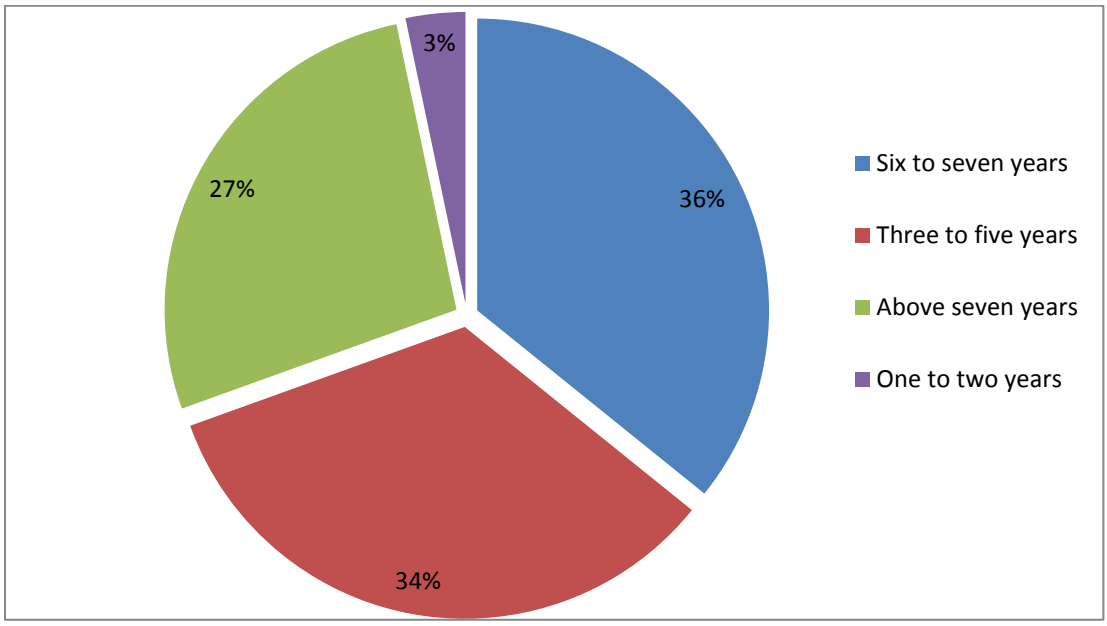

Figure 4.3: Number of Years the SMEs has been in Operation

4.4 Independent Variables

This part discusses the results which were obtained after collecting information on each of the four independent variables using a 5 point likert scale.

4.4.1 Promotion Marketing Strategy and SMEs Performance

Promotional marketing involves provision of special offers for products, advertisements through billboards, flyers and posters, product branding and use of social media to promote business products. Table 4.6 below gives the results of promotional marketing. The respondents strongly agreed that giving special offers and using billboards & other similar media has a positive impact on business performance. The respondents were also of the idea that product branding and use of social media is beneficial to performance improvement efforts.

Table 4.6: Promotional Marketing Strategies

Statement	Mean	SD
Special offer of the products tend to improve the performance of SMEs.	1.74	.933
Billboards and other promotional materials have a considerable effect on SME performance.	1.74	.775
Product branding can lead to increased business performance in SMEs	1.86	1.000
Social media marketing enhances SME performance.	1.87	.949

4.4.2 Price Marketing Strategy and SMEs Performance

Pricing is another marketing strategy that influences SME performance. Individual pricing strategies such as setting same product prices as competitors, lowering product prices, negotiating prices, discounting prices, and setting different prices for different products were considered. According to table 4.7 below, the respondents' perceptions were that setting same prices for products as competitors increases sales. They also agreed that lowering prices had

increased business market share and allowing customers to negotiate prices had also increased sales. They also agreed that provision of discounted prices for products had increased sales.

Table 4.7: Price Marketing Strategies

	Mean	SD
Setting the same prices as competitors can impact the performance of the business positively.	2.17	1.229
Lowering of the prices can lead to better long term SME performance.	2.40	1.179
Allow customers to negotiate prices is good for the performance of our business.	2.53	1.160
Discounting prices of different products occasionally is helpful to our business performance enhancement efforts.	2.46	1.194

4.4.3 Product Marketing Strategy and SMEs Performance

The study further sought to find out respondents views on the effects of product marketing strategies such as introduction of new products, diverse products, having a main product and improvement on the product appearance on the performance of the SMEs. The respondents agreed that the introduction of new products would lead to increased sales. They also agreed that diversified products have allowed the business to increase its revenue, concentration on one main product would not be beneficial to the firm, and that the product packaging is key to the appeal of the product, and hence its demand.

Table 4.8: Product Marketing Strategies

	Mean	SD
Introduction of new products periodically is good to the business	2.84	.994
Diversified products have allowed the business to increase its revenue	2.58	1.146
Concentration on one main product would not be beneficial to the firm	2.46	1.087
The product packaging is key to the appeal of the product, and hence its demand.	2.45	1.093

4.4.4. Place Marketing Strategy and SMEs Performance

The study established the influence of place marketing strategies on the performance of the SMEs. Respondents were required to show their level of agreement on a 5 point likert scale (where 1 represented "strongly agree" and 5 represented "strongly disagree") with the following place marketing strategies: use of innovative distribution channels has a positive impact on performance, the business location has implications on its success, direct sales have a noticeable impact on business performance in SMEs; and use of a variety of retailers affects SMEs performance.

The results, as shown in table 4.9 below, showed that largely, the respondents either agreed or were weakly in agreement with the propositions that use of innovative distribution channels, location of business, direct sales and use of variety of retailers as place marketing strategies had led to improved business performance.

Table 4.9: Place Marketing Strategies

	Mean	SD
Use of innovative distribution channels has a positive impact on performance	2.70	.912
The business location has implications on its success	2.81	1.184
Direct sales have a noticeable impact on business performance in SMEs.	2.86	1.180
Use of variety of retailers affects SMEs performance	2.71	1.129

4.5 Dependent Variable: SMEs' Business Performance

The business performance of the SMEs was the dependent variable of this study. The responses received with respect to the likert statements which were in respect to this variable are

summarized in table 4.10 below. It is quite plain that the respondents were in agreement on the essence of implementing marketing strategies as a ploy of increasing the performance of their businesses.

Table 4.10: SMEs' Business Performance

	Mean	SD
The business has performed well in the recent past	1.74	.933
I have practically witnessed the impact of a marketing strategy in my business	2.84	.994
I intend to roll out more marketing campaigns in the future	2.46	1.194
There are some marketing strategies which are more suited for my type of business than others	2.71	1.129

4.6 Validity and Reliability Analysis

Since the study was designed carefully using the descriptive research design approach, we can infer that the findings can be generalized throughout SMEs and hence they have external validity. Construct validity can be inferred from the fact that most of the regressors were significant and the overall regression model, as indicated in the ANOVA table, was also significant.

To measure the reliability of the data collection instruments an internal consistency technique, the Cronbach's alpha, was computed using SPSS. Table 4.11 below indicates that the research instrument was reliable since data obtained from all independent variables had a Cronbach's alpha of greater than 0.7. This means that the research data had relatively high internal consistency and could be generalized to reflect opinions of all possible respondents in the target population on the impact of marketing strategies of SMEs business performance in Kitengela.

Table 4.11: Reliability Analysis

Variable	Cronbach's Alpha	Comments
Promotion Strategy	0.851	Acceptable
Price Strategy	0.874	Acceptable
Product Strategy	0.886	Acceptable
Place Strategy	0.832	Acceptable

4.7 Regression Analysis and Related Procedures.

This part discusses regression analysis and procedures related to it which were carried out on the data. These procedures include OLS regression and use of line of good fit.

4.7.1 OLS Regression Analysis

In order to quantify the relationship between the independent variables and the dependent variable, the researcher undertook an ordinary least squares regression analysis. Table 4.12 below shows the results of the regression analysis.

Table 4.12: Regression Analysis

Model		Unstandardized Coefficients		Standardized Coefficients	t	Sig.
		B	Std. Error	Beta		
1	(Constant)	.075	.040		1.875	.063
	Promotion Strategy	.211	.047	.185	4.497	.000
	Price Strategy	.125	.094	.132	1.330	.185
	Product Strategy	.173	.059	.205	2.939	.004
	Place Strategy	.449	.064	.493	6.986	.000
a. Dependent Variable: Business Performance of SMEs						

Source: Author (2015)

The regression analysis table shows that all the regressors had a positive impact on business performance of SMEs. Additionally, all independent variables, except the price strategy, were significant. Equation i can therefore be restructured as:

$Y = 0.075 + 0.211X_1 + 0.173X_3 + 0.449X_4$……...(ii)

Where:

Y = Business Performance

0.075 = Constant Y-Intercept. This represents the level of Business Performance of the Study SMEs taking other factors of the study at zero.

X_1 = Promotion Strategy

0.211 = Coefficient of X_1 (change in Business Performance due to a unit change in Promotion Strategy)

X_3= Product Strategy

0.173 = Coefficient of X_3 (change in Business Performance due to a unit change in Product Strategy)

X_4= Place Strategy

0.449 = Coefficient of X_4 (change in the Business Performance due to a unit change in Place Strategy)

Independent variable X_2 was omitted from the final model since its impact on the dependent variable (Y) is not significant. This is because its p value is more than 0.05.

4.7.2 Model Goodness of Fit

Table 4.13 below shows the R^2 of the model as 0.684. This is an indication of a strong goodness of fit of the study data to regression analysis as the empirical model. The value of the R^2 means

that 68.4% of the variability in the dependent variable (SMEs' business performance) can be explained by variability in the firm's price strategy, product strategy, place strategy, and promotion strategy. The remaining 31.6% of variability can be attributed to other factors that are not included in the model.

Table 4.13: R Square

Model	R	R Square	Adjusted R Square	Std. Error of the Estimate
1	.692[a]	.684	.683	.11311
a. Predictors: (Constant), Place Strategy, Promotion Strategy, Product Strategy, Price Strategy				

4.7.3 Analysis of Variance (ANOVA)

The ANOVA Table is used to indicate whether the overall regression model is significant or not. Since the p – value of this study's Analysis of Variance was less than 5% (See table 4.14 below), we can deduce that the regression model was significant.

Table 4.14: Analysis of Variance

Model		Sum of Squares	df	Mean Square	F	Sig.
1	Regression	110.177	4	27.544	2152.861	.000[a]
	Residual	1.842	144	.013		
	Total	112.019	148			
a. Predictors: (Constant), Place Strategy, Promotion Strategy, Product Strategy, Price Strategy						
b. Dependent Variable: Performance of SMEs						

4.7.4 Hypothesis Testing

Going by the results outlined in the regression table, we can see that except price strategy, all other independent variables were significant.

H_{01}: Place marketing strategy does not affect business performance of SMEs in Kitengela.

H_{02}: promotion marketing strategy does not affect business performance of SMEs in Kitengela.

H_{03}: price marketing strategy does not affect business performance of SMEs in Kitengela.

H_{04}: product marketing strategy does not affect business performance of SMEs in Kitengela.

Therefore the conclusion is to *reject* hypothesis one, two, and four and *do not reject* hypothesis three.

CHAPTER FIVE

SUMMARY OF FINDINGS, CONCLUSIONS AND RECOMMENDATIONS

5.1 Introduction

This chapter presents a summary of research findings, conclusions and recommendations on the impact of marketing strategies on business performance of SMEs in Kitengela Township.

5.2 Summary of Findings

The study sought to investigate the impact of marketing strategy on firm performance of small and medium enterprises in Kitengela Township, Kajiado County, Kenya. Specifically, the study addresses the following objectives: To determine the impact of promotion strategy on the business performance of SMEs in Kitengela, to determine the impact of pricing strategy on the business performance of SMEs in Kitengela, to determine the impact of product strategy on the business performance of SMEs in Kitengela, and to determine the impact of place strategy on business performance of SMEs in Kitengela. The study established findings concerning the objectives as follows:

Concerning the objective on promotion marketing strategies, the study generally established that most respondents strongly agreed that promotional strategies affect business performance while a small number of the respondents voiced dissenting opinions. The study results also revealed that there was a significant relationship between promotional marketing strategies and SME performance. The strength of this significance was established to be strong as indicated by the p-value of 0.00. This result affirms to the use of various promotional avenues as tools to enhance the business publicity of SMEs. On the objective of pricing marketing strategy, the study sought

to find out the effect of pricing strategies such as setting same product prices as competitors, lowering product prices, allowing customers to negotiate prices, and offering discounted prices on SME performance. The study findings indicated that the respondents agreed, albeit weakly, that price marketing strategies would influence business performance positively. However, the study findings, as evidenced by the p – value of 0.185, indicated that the relationship between price marketing strategies and business performance of SMEs is not significant. Nevertheless, these findings corroborate with the proposition that any SME in its inception or in introduction of new products must consider their price penetration strategy as suggested by Ogunmokun (2004). The insignificant relationship between price marketing and business performance of SMEs provides an indication to the reason that, SMEs may be having loyal consumers such that reduction in price doesn't necessarily implies customer growth or increased business performance. These findings are similar to the results of Chiliya and Roberts (2009). They also bear some semblance with Muthee and Ngugi (2014) who established that price marketing strategy positively impacts on the growth of SMEs.

On product marketing strategies the respondents weakly agreed that the introduction of new products increased sales. The respondents also agreed that diversified products had allowed the business to increase its revenue. Further, they agreed that concentration on one main product would not be beneficial to their organizations. The study results indicated that most of the respondents agreed that product marketing strategies influences business performance. The study results also revealed that there was a positive and significant relationship between product marketing strategies and SME performance. This was indicated by a p-value of 0.004. The strong importance that respondents attached to the product marketing strategy alludes to the fact that all

marketing revolves around the product. This finding also validates the belief that the product consideration is quite impactful on business performance in terms of profitability and market share with this being attributed to the reason that customers do really look at product attributes such as quality, features, design and style. These findings align themselves with the findings of Muhammad, et al, (2011) and Adewale (2013) who established a positive relationship between product marketing and business performance. Finally, on the objective on the effect of place marketing strategies on business performance, the results of the study showed that majority of the respondents agreed that place marketing strategies influences SME business performance. A minor number of respondents were undecided, strongly agreed, disagreed or strongly disagreed. The study results concluded a positive and significant relationship between place marketing strategies and SME performance. Place considerations, i.e. the location, accessibility and channels of distribution employed by the business were also highlighted as major concerns for owners of businesses as far as strategic positioning is concerned. These results corroborate the findings of Mahmoud (2011) who found out that place marketing strategy is the second most important strategy that affect business performance of SMEs after product marketing strategy.

5.3 Conclusion

This study validates previous scholars' assertions about the relationship between market strategies and SME performance with a focus on the SMEs sector in Kenya. Despite the lack of agreement on the most effective marketing strategy that SMEs can use, the study demonstrates that, place marketing strategy, product marketing strategy, price marketing strategy and promotion marketing strategy when applied will positively influence the growth of SMEs. Marketing will function effectively only when there is commitment from the management. The

SMEs can easily bring in the innovative marketing practices as they don't have layers between the decision makers and the people who implement these decisions. The SMEs need to formulate their goals clearly and then evaluate the various marketing strategies alternatives on the basis of their capabilities and resources.

It can be concluded that SMES need to give importance to the location of their business as place marketing strategy influences the distribution of product from the sellers to the consumers and even suppliers. It can also be deduced that SMEs need give heed to penetration pricing strategy a key component of price marketing strategy. This is because most of the SMEs were of the view that lowering prices can have desired effects on business performance. Conclusively, it can be argued that place marketing strategies have the biggest impact on the business performance of SMEs, since this regressor had the largest coefficient. Thus SMEs are advised to seek strategic locations and make smart choices with respect to their distribution channels and other aspects of the place strategy.

5.4 Recommendation

There is need for SMEs to increasingly innovate and adopt marketing strategies that have the highest impact on their business and can achieve such impact with the lowest cost possible. There is need for SMEs to pay more attention to business locations and other aspects of the place strategy, their promotion strategies, and product development strategies as the key areas of focus. Nevertheless, SMEs should pay attention to the 4P's marketing mix since the combined effect of the components of the marketing mix provides higher business performance. They should continually innovate on their 4Ps marketing strategies. SMEs should increasingly use social

media in their marketing attempts since it harmonizes relationships and networking market strategies. Other types of marketing strategies such as promotion market strategy have the potential to offer SMEs great benefits.

5.5 Areas for Further Research

There is need for more studies that will focus on the impact of marketing strategies on business performance of SMEs in various sectors. There is also need for more studies at national level to fully understand the impact of marketing strategies on business performance of SMEs thus providing conclusive evidence.

REFERENCES

Asgar A, Hossein A, Mohammad H. (2013). Market Orientation and Business Performance among SMEs Based In Ardabil Industrial City-Iran: *Journal of Business and Management Review*, 2(7)

Bala, S. M. H. (2009). Nuture and Strategy of Product Innovations SMEs: a Case Study-Based Comparative Perspective of Japan and India. *Journal of Innovation, Management, policy & practice,* 11 (1): 104.

Blankson, C. and Cheng, J.M.S. (2005). "Have Small Businesses Adopted the Market Orientation Concept? The Case of Small Businesses in Michigan", *Journal of Business and Industrial Marketing*, 20, 6, 317-30.

Colpan, A. M. (2006). Dynamic Effects of Product Diversity, International Scope and Keiretsu Membership on the Performance of Japan's textile firms in the 1990s: *Asian Business and Management, 5*(3), 419-445.

Darroch, J. M., Morgan, P., Jardine, A. & Cooke, E. F. (2004), "The 2004 AMA Definition of Marketing and its Relationship to a Market Orientation

Diale, A. J. 2008. *Government support for small, micro and medium enterprises (SMME's) as a venture for business and economic development in South Africa, Research Paper.*

Franco-Santos, M., Kennerley, M., Micheli, P., Martinez, V., Mason, S., Marr, B., Gray, D. & Neely, A. (2007). Towards a Definition of a Business Performance Measurement System. *International Journal of Operations & Production Management,* 27(8): 784-801.

Gbolagade Adewale, Adesola A, Oyewale .O. (2013). Impact of Marketing Strategy on Business Performance: A Study of Selected Small and Medium Enterprises (SMEs) *Journal of Business and Management (IOSR-JBM). Volume 11(4)*

Goi, C. L. (2005). Marketing Mix: A Review of 3Ps: *Journal of Internet Banking and Commence*, Vol. 10 No 1

Gruber, M, Heinemann, F., Brettel, M. & Hungeling, S. (2010). Configurations of Resources and Capabilities and their Performance Implications: An Exploratory Study on Technology Ventures. *Strategic Management Journal,* 31(12): 1337-1356.

Jaworski, B. J., & Kohli, A. K. (1996), "Market Orientation: Review, Refinement and Roadmap", *Journal of Market Focused Management,* 1(12).

Jones .S (2007), Exploring corporate strategy: Text & Cases 8th Edition.

Kemppainen, K., Vepsäläinen, A & Tinnilä, M. (2008). Mapping the Structural Properties of Production Process and Product Mix: *International Journal of Production Economics. 111*(2), 713-728.

Ken, H, Nguyen, T. M. and Ping, H. 2007. The Effects of Entrepreneurial Orientation and Marketing Information on the Performance of SMEs, *Journal of Business Venturing,* 22 (4): 592-611.

Kim, S. W. (2006b). Effects of supply chain management practices, integration and competition capability on performance. *Supply Chain Management: An International Journal,* 11(3): 241-248.

Kotler, P. and Armstrong, G. (2006). *Principles of Marketing,* New Jersey, Pearson Education Inc., 10th Edition

Kotler P (2007). *Marketing: An introduction,* New Jersey: Pearson Education Inc.

Laljit, C.R. (2006). The Business Strategy Development among SMMEs in the Kwa Zulu Natal Clothing Manufacturing Sector. Unpublished MBA Dissertation, Durban University of Technology.

Long- Yi .L & Ya-Huei.C.(2012). The Impact of New Product Marketing Strategy on New Product Performance: The Moderating Effects of Competitive Intensity and Product. Research Paper.

Meerman, D. (2010). "*The New Rules of Marketing* & PR",2a Edn, Wiley, Estados Unidos de América, New Jersey.

Mohammed A. (2011). Market Orientation and Business Performance among SMEs in Ghana, International Business Research Vol. 4, No. 1; January 2011.

Owomoyela S.K, Oyeniyi K.O & Ola O.S, (2013).Investigating the impact of marketing mix elements on consumer loyalty: An empirical study on Nigerian Breweries Plc. *Interdisciplinary Journal of Contemporary Research in Business.* 4 (11), 485 –496.

Powpaka S. (2006). How Market Orientation Affects Female Service Employees in Thailand. *Journal of Business Research*, 59(3)

Ruben J (2012). Managing after Sales Services: Strategies and Inter Firm Relationships. *PhD Thesis* of Diph-Kfm Technic., University.

Saccani, N., Johansson, P. & Perona, M. (2007). Configuring the After-Sales Service Supply Chain: A Multiple Case Study: *International Journal of Production Economics, 110*(1-2), 52-69.

Sajuyigbe A.S, Ayanleke S.O and Ola O.S. (2013). Impact of Packaging on Organizational Sales Turnover: A Case Study of Patterzon Zoconist Cussons (pz) Plc, Nigeria: *Interdisciplinary Journal of Contemporary Research in Business. 4 (11), 497 – 508.*

Smile D, Ofosu D (2014), Marketing Strategies and the Performance of SMEs in Ghana: *European Journal of Business and Management*, Vol.6, No.5, 2014

Smith, R. (2008). Some Reflections on the Dynamic of Village Entrepreneurship: *International Journal of Entrepreneurship and Small Business*, 6 (3): 370-389.

Song, M, Droge, C., Hanvanich, S. & Calantone, R. (2005). Marketing and Technology Resource Complementarity: An analysis of their interaction effect in two environmental contexts. *Strategic Management Journal*, 26(3): 259-276.

Sousa, S. D., E. Aspinwall, et al. (2006). "Performance Measures in English Small and Medium Enterprises: Survey Results." Benchmarking: *An international Journal* 13(1/2): 120-134.

Stokes, D. and Chen, H. 2009. Small Business and the Environment: Turning over a New Leaf. *Business Strategy Environment*, 19 (5): 273-288.

Van Scheers, L. and Radipere, S. 2008. Gathering Perceptions of Soweto Small Business Owners on Advertising in Black Townships in South Africa: *Journal for Global Business Advancement*, 1 (4): 445-458.

Wood, E. H. (2006). The Internal Predictors of Business Performance in Small Firms. *Journal of Small Business and Enterprise Development*, 13(3): 441-452.

Zulkiffli, S. & Perera, N. (2011). A Literature Analysis on Business Performance for SMES - Subjective or Objective Measures? 2011 SIBR Conference on Interdisciplinary Business and Economics Research. Bangkok, Thailand: Society of Interdisciplinary Business Research (SIBR).

APPENDICES

APPENDIX I

INTRODUCTION LETTER

KCA UNIVERSITY
- 1989 -

Thika Road, Ruaraka
P.O. Box 56808 - 00200 Nairobi, Kenya
Pilot Line: +254 20 8070408 / 9

Tel: +254 20 3537842
Fax: +254 20 8561077
Mobile: +254 734 888022, 710 888022
Email: kca@kca.ac.ke
Website: www.kca.ac.ke

KCAU/SGS/MBA/Sept.15/49 5th October 2015

To whom it may concern,

Dear Sir/Madam,

RE: JAMES T. SAPURO REG NO. 14/00859

It is my distinct pleasure to introduce to you Mr. James Sapuro who is a student in our institution pursuing a Master of Business Administration degree at the School of Business and Public Management.

James is conducting a research on a topic titled: "*Impact of Marketing Strategies on Performance of Small and Medium Enterprises in Kitengela Township, Kajiado County*" which is part of the requirements of the program he is pursuing. The research as well as the data procured thereof shall be used for academic purposes only.

Any assistance accorded to him is highly appreciated.

In case of further inquiry, do not hesitate to contact the undersigned.

Yours faithfully,

KCA UNIVERSITY SCHOOL OF GRADUATE STUDIES 05 OCT 2015 P.O. BOX 56808 - 00200, NAIROBI

Dr. R. Muchiri Mwangi
Dean, School of Graduate Studies & Research

APPENDIX II

QUESTIONNAIRE

1) Name: (Optional) …….…….
2) Age……..…….……..

PART A: DEMOGRAPHIC INFORMATION

3. What is your gender?

Gender	Tick as Appropriate
Male	
Female	

4. What is your age bracket?

Age	Tick as Appropriate
Below 35 Years	
36-50 Years	
51-65 Years	
Above 65 Years	

5. What is your highest level of education?

Level of Education	Tick as Appropriate
Primary	
Secondary	
Diploma	
Degree	
Postgraduate	

6. What is your position in the business?

Position in the Business	Tick as Appropriate
Owner	
Manager	
Employee	

7. Which type of business are you involved in?

Type of Business	Tick as Appropriate
General Retail Shops	
Hardware Shops	
Wholesale Traders	
Baby Care Firms	
Supermarkets	
Hotels	
Motor vehicle Repair Shops	
Manufacturing Firms	
Others	

8. What form of ownership do you have in this business?

Form of Ownership	Tick as Appropriate
Sole proprietorship	
Family business	
Partnership	
A limited liability company	

1) **9. How many years has this business been in operation?**

No. of years business has been in operation	Tick as Appropriate
1 – 2 years	
3-5 years	
6-7 years	
Above 7 years.	

SECTION B: PROMOTION MARKETING STRATEGY AND PERFORMANCE

To what extent do you agree with the following statement on the relationship between place marketing strategies and performance of SMEs? ***Please tick where applicable. SA- Strongly Agree, A-Agree, N - Neutral, D-Disagree, SD- Strongly Disagree***

Statement	**SA**	**A**	**N**	**D**	**SD**
Special offer of the products tend to improve the performance of SMEs.					
Billboards and other promotional materials have a considerable effect on SME performance.					
Product branding can lead to increased business performance in SMEs					
Social media marketing enhances SME performance.					

SECTION C: PRICE MARKETING STRATEGY AND PERFORMANCE

To what extent do you agree with the following statement on the relationship between place marketing strategies and performance of SMEs? ***Please tick where applicable. SA- Strongly Agree, A-Agree, Undecided, D-Disagree, SD- Strongly Disagree***

Statement	**SA**	**A**	**N**	**D**	**SD**
Setting the same prices as competitors can impact the performance of the business positively.					
Lowering of the prices can lead to better long term SME performance.					
Allow customers to negotiate prices is good for the performance of our business.					
Discounting prices of different products occasionally is helpful to our business performance enhancement efforts.					

SECTION D: PRODUCT MARKETING STRATEGY AND PERFORMANCE

To what extent do you agree with the following statement on the relationship between place marketing strategies and performance of SMEs? ***Please tick where applicable. SA- Strongly Agree, A-Agree, Undecided, D-Disagree, SD- Strongly Disagree***

Statement	**SA**	**A**	**N**	**D**	**SD**
Introduction of new products periodically is good to the business					
Diversified products have allowed the business to increase its revenue					
Concentration on one main product would not be beneficial to the firm					
The product packaging is key to the appeal of the product, and hence its demand.					

SECTION E: PLACE MARKETING STRATEGY AND PERFORMANCE

To what extent do you agree with the following statement on the relationship between place marketing strategies and performance of SMEs? ***Please tick where applicable. SA- Strongly Agree, A-Agree, Undecided, D-Disagree, SD- Strongly Disagree***

Statement	**SA**	**A**	**N**	**D**	**SD**
Use of innovative distribution channels has a positive impact on performance					
The business location has implications on its success					
Direct sales have a noticeable impact on business performance in SMEs.					
Use of variety of retailers affects SMEs performance					

SECTION F: BUSINESS PERFORMANCE OF SMES

To what extent do you agree with the following statement on the performance of SMEs? ***Please tick where applicable. SA- Strongly Agree, A-Agree, Undecided, D-Disagree, SD- Strongly Disagree***

Statement	**SA**	**A**	**N**	**D**	**SD**
The business has performed well in the recent past					
I have practically witnessed the impact of a marketing strategy in my business					
I intend to roll out more marketing campaigns in the future					
There are some marketing strategies which are more suited for my type of business than others					

THANK YOU AND GOD BLESS YOU

~ The End ~